JUBE

Design Favaretto&Partners

JUBE LT G

Jube is a collection with a vintage style consisting of four types: suspension, wall, table, floor, all with LED light sources. Three diffuser sizes in five colours: smoky, burnt earth, old green, crystal and amethyst - and the possibility in the two larger sizes to combine a second diffuser in white glass to look like a single piece.

JUBE LT G

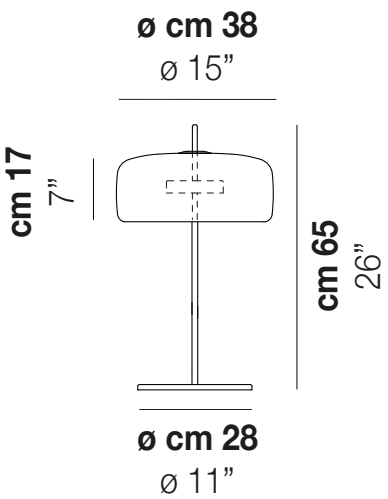

TECHNICAL DATA:

IP20

CERTIFICATIONS:

LED 2700K DIM4	1x13W	120V/60Hz	Led 13W	2000lm	2700K	37V	DIM4 Push
LED 3000K DIM4	1x13W	120V/60Hz	Led 13W	2000lm	3000K	37V	DIM4 Push

VOLUME	Mc 0,14
GROSS WEIGHT	Kg 11
NET WEIGHT	Kg 6

download

SHADE FINISHING

AATR

CRTR

FUTR

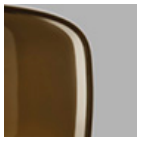
TBTR

VATR

FRAME FINISHING

AVS

NEO

OS

OTHER VERSION AVAILABLE

Click on the version to go to the web version of the product

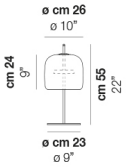

JUBE LT P

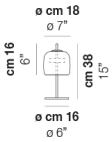

JUBE LT S